CPD Catalytic Pressurless Depolymerisation

PARADICONS
DIESEL-KAT

The PDC Technology

PARADICONS
DIESEL-KAT

Chemical-Catalytic will be the future

Crude Oil is a product derived from Biomass. We will continue to derive this product from Biomass, however in the Future it will come from Biomass currently active in the Carbon cycle. It will not be recovered from the depth of the earth, where its carbon content is securely stored. And despite being produced from Biomass, there will also be no need to compete with Food production. This Oil will be produced from the by-products of activity involving organic materials, and in this way also become a solution to the growing problem of waste disposal. After many mistakes made by researchers and developers to harness the energy in biomass through pyrolysis, gasification and the Fischer – Tropsch – Synthesis, we now know that the only real solution is chemical-catalytic, at temperatures below 300 degrees Celsius.

PDC = Chemical-Catalytic pressure free conversion to oil

This natural process to convert Biomass to oil started about 1 Billion years ago with the development of photosynthesis. This created an atmosphere rich in Oxygen, instead of CO_2. The internal nuclear heating of the Planet, which started about 320 Million years ago, caused the formation of Volcanoes emitting CO_2, the splitting of the one original continent into 5, expansion of the oceans through the extraction of water of crystallisation and the increase of the earth's size to 2.5 times its previous diameter. The continents became green, and the earth's atmosphere reached an oxygen content of 20.9%.

This oxygen content was possible, because the emerging plant life absorbed CO_2, which then was stored underground where it gradually converted to Oil, and under different circumstances to Coal.

This stored energy of the past is not only limited, its use also pollutes our atmosphere by again releasing these vast amounts of CO_2 into the Atmosphere, again enriching it with CO_2. This, as we know, creates global warming. In a socio-economic view, the Industrial activity related to its recovery creates a relative small amount of Jobs, benefitting only a selected few. The PDC Technology requires only the waste of agricultural activity, and it will through implementation in poorer areas of the world lead to potentially full employment and a sustainable wage for those who often have nothing now. Only 10% of the bi-products of the available arable land would be sufficient to fill the current demand, and this option is not limited like oil and coal reserves, but can continue for as long as the sun shines, and our earth supports life.

The PDC Technology

PARADICONS DIESEL-KAT

Development of crude oil and oxygen in the atmosphere due to photosynthesis

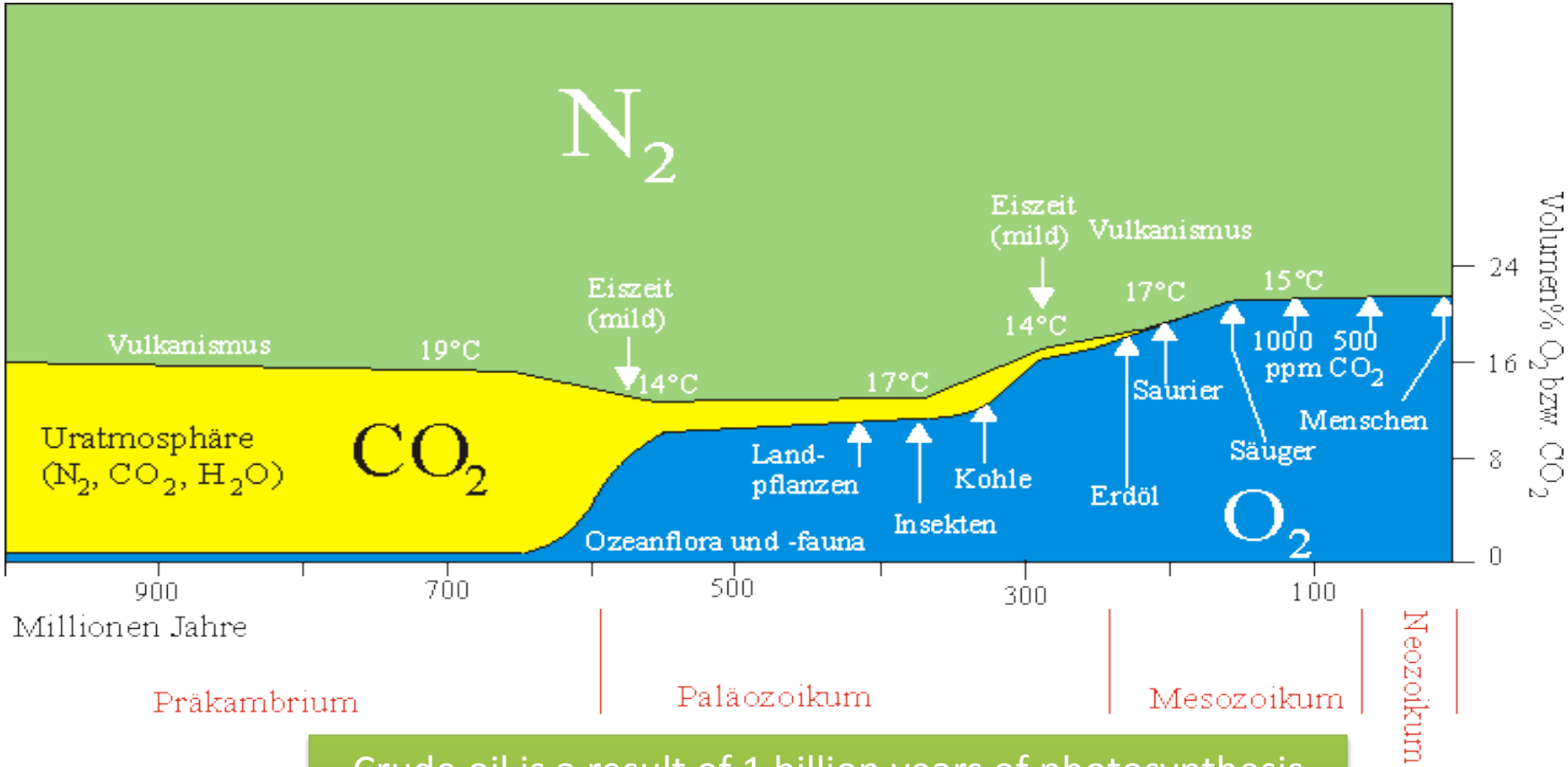

Crude oil is a result of 1 billion years of photosynthesis
Synthetic oil production is a copy of this natural process

The PDC Technology

PARADICONS DIESEL-KAT

Non – pyrolytic production of fuel, through chemical-catalytic conversion to Diesel with natural suspended catalysts (Kation-Aluminium-Silicates) in the carrier oil without the creation of undesirable by-products

The raising of the temperature to above 300 degrees Celsius in the reactor is considered pyrolysis. (thermal destruction) It produces dioxins, furans, coke, sticky particles, olefins and other undesirable by-products of thermal destruction. After the pyrolysis process, this product needs to be further converted through gasification or Fischer – Tropsch – Synthesis partially to synthesis product. The majority is not convertible, and is burned for process heat. Finally, only about 2% of the calorific value of the input material is converted to Diesel. This process, utilized by Choren and Bioliqu for example, requires 63 steps in line, needs a massive plant and reaches costs in excess of € 500 Million.

The chemical – catalytic reaction in the PDC requires extensive mixing of the input material and catalyst, in order to ensure that all surface of the input material get's in contact with the catalyst. This starts the catalytic reaction which extracts the oxygen content from the input material in the form of CO_2, and the formation of oil without any oxygen content in the product once the process is completed.

$$\text{(Cellulose) } C_6H_{11}O_5 = 2{,}5\ CO_2 + 3{,}5\ CH_2 \text{ (Diesel)} + 4H$$

This intensive mixing utilizes the majority of the process energy to ensure a complete blending of the catalytic oil with the input material molecule by molecule. This process is only possible in a mixing Turbine, application of external heat is not capable of creating such a reaction. The internal creation of process heat via the Turbine also ensures the least possible energy loss. This process reaches through friction the necessary temperature of 240° C for the production of Diesel in the timeframe required. This form of reactor is currently the only system capable to produce this reaction through complete blending of the catalyst with the reactive material. For this purpose we have designed a new, low maintenance mixing Turbine, featuring dynamic seals, produced in precision melting.

The PDC Technology

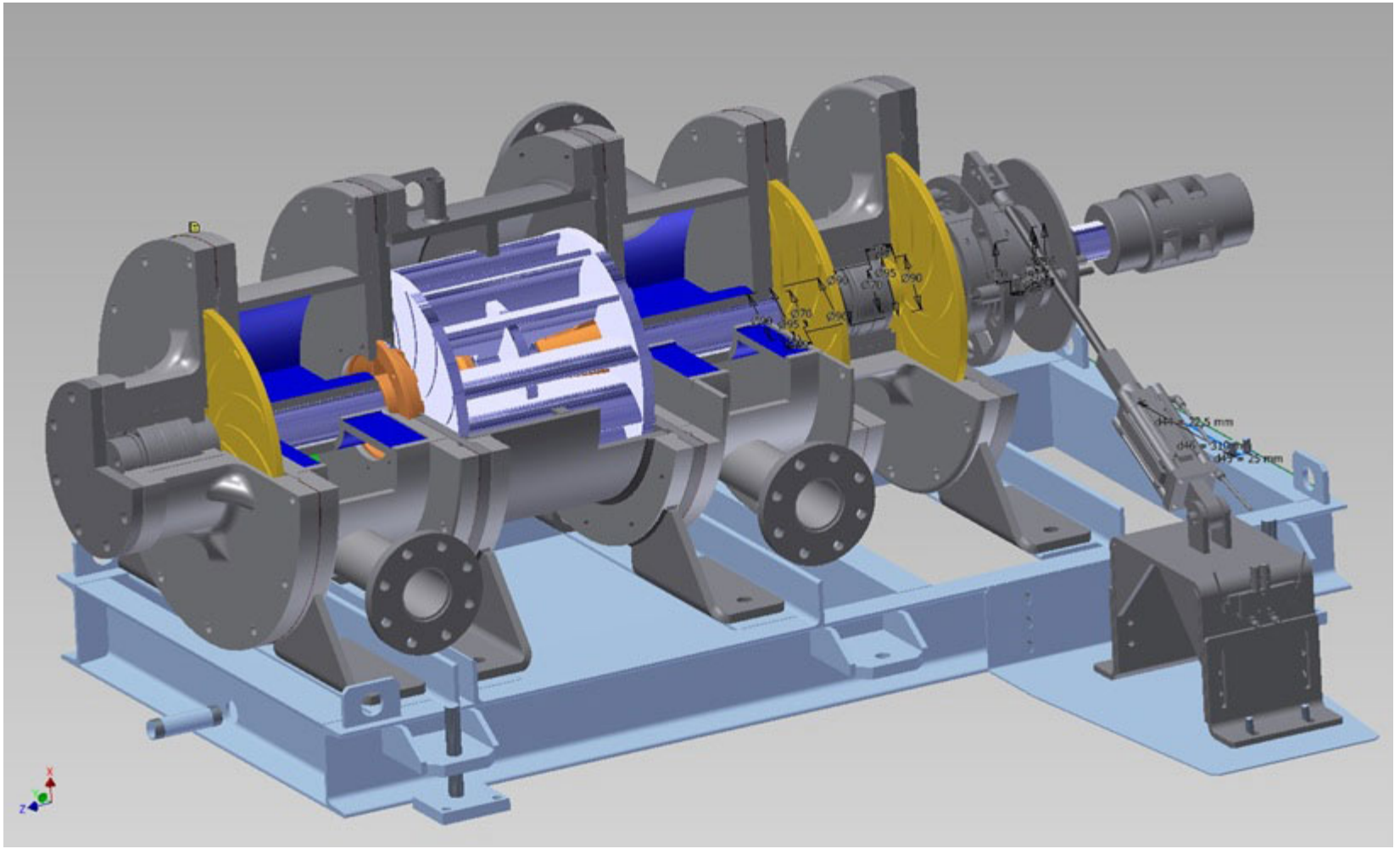

Schematic of the reactor

PARADICONS DIESEL-KAT

The first series of plants of the first generation consist of the following components:

•Pre-processing : Mixing of the shredded input material with the catalytic oil in a swirl at 170°C to generate the first catalytic reaction, turning the solid input material to a sludge.

•KDV Turbine: Reaction of the sludge and separation of the diesel steam from the rest of the catalytic oil. This catalytic oil empties into the oil collecting vessel and begins the process of converting the next sludge entering the Turbine from the pre-processing to Diesel.

•Ash plant : To limit the inorganic contents in the circulation oil to no more than 40%, portions of this saturated oil are extracted over the gap filter to the catalytic evaporation plant.

•Feeding system for the input material of bio residues, organic residues and industrial residues containing hydro carbons.

•Safety system to stabilize the plant.

•The inherit weakness of the first generation plants was the requirement for a large network of piping between the individual parts of the plant. These pipe systems were the casue of some problems to the continuous flow of material, and therefore Para-Cat developed a revolutionary new system, without the need for such an extensive use of pipes, as you will see in the next slides.

The PDC Technology

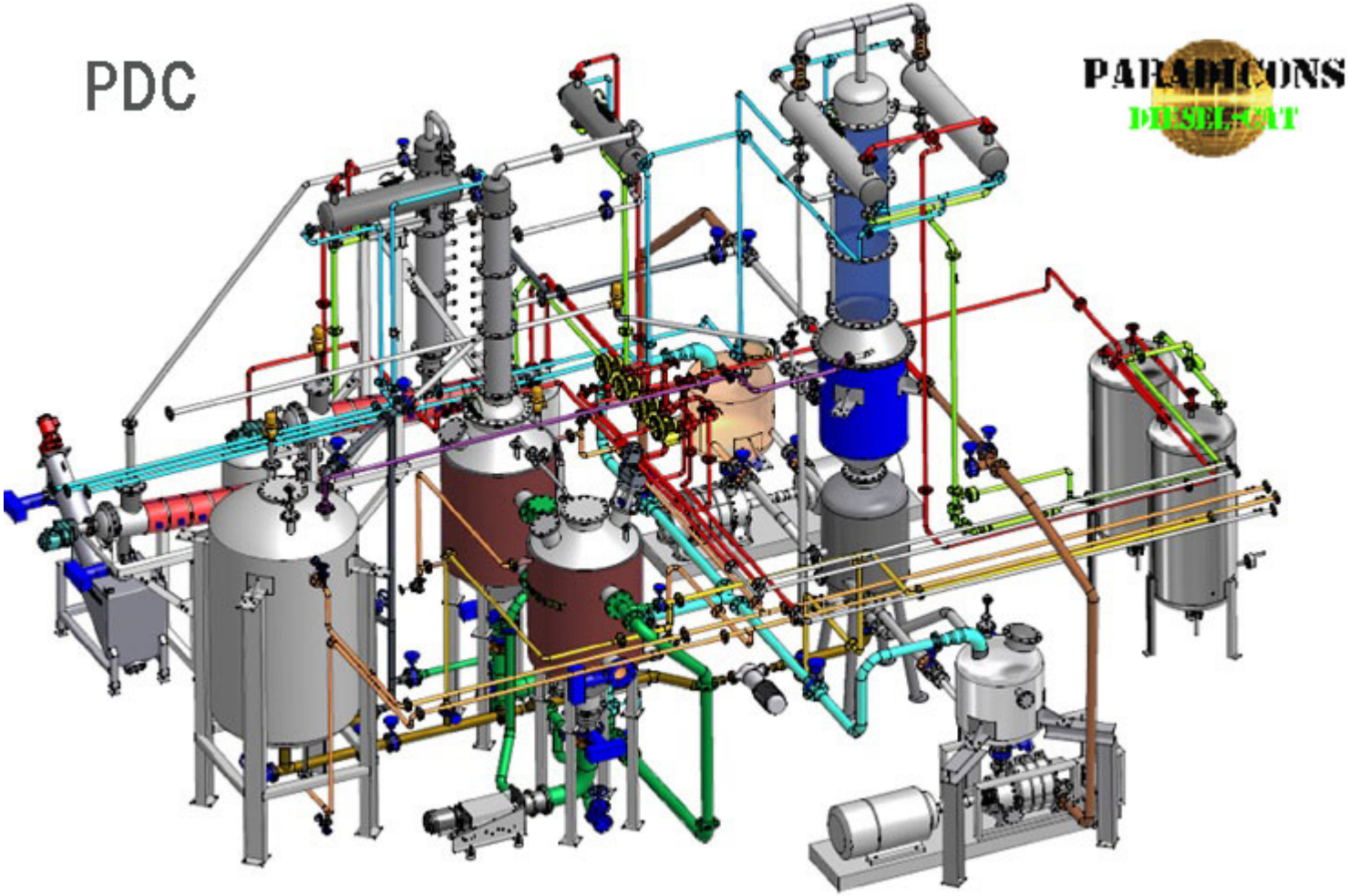

The PDC Technology

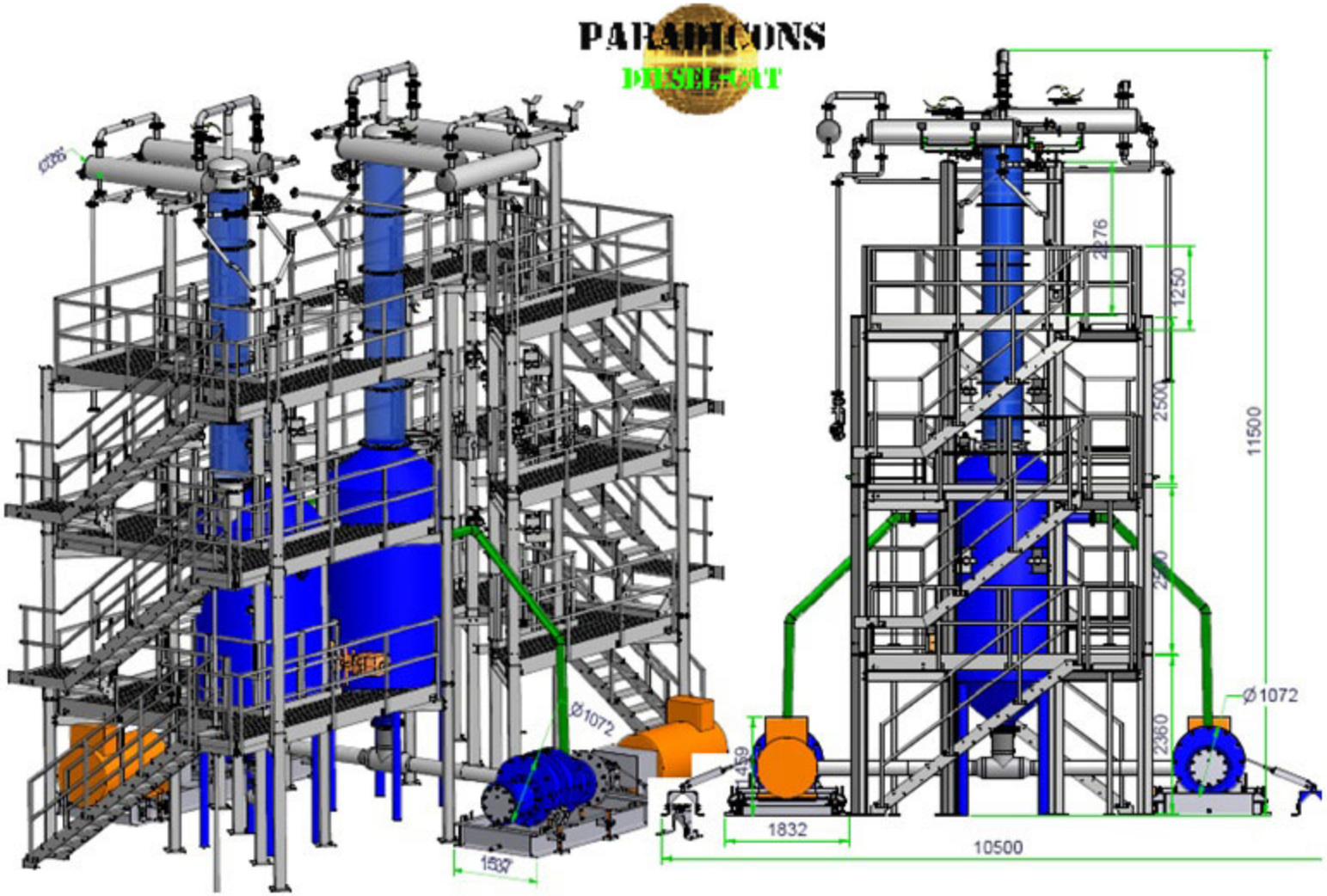

The PDC Technology

PARADICONS
DIESEL-KAT

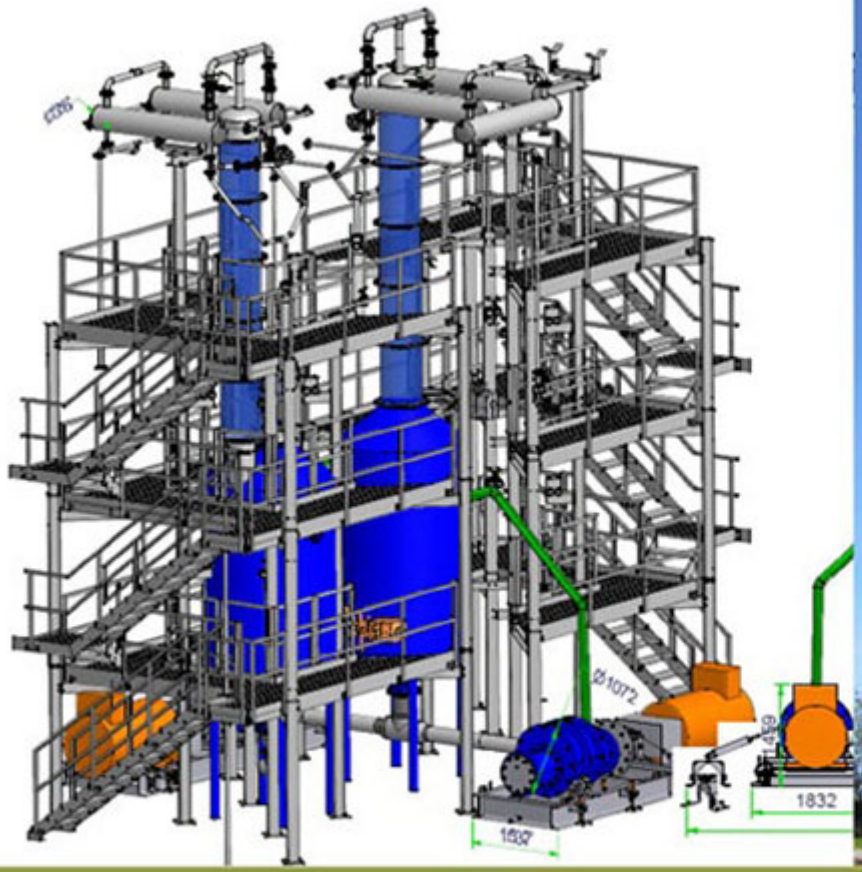

PDC 1000 COMPACT

The PDC Technology

PARADICONS
DIESEL-KAT

PDC PLANT- PROCESS FLOW DIAGRAM

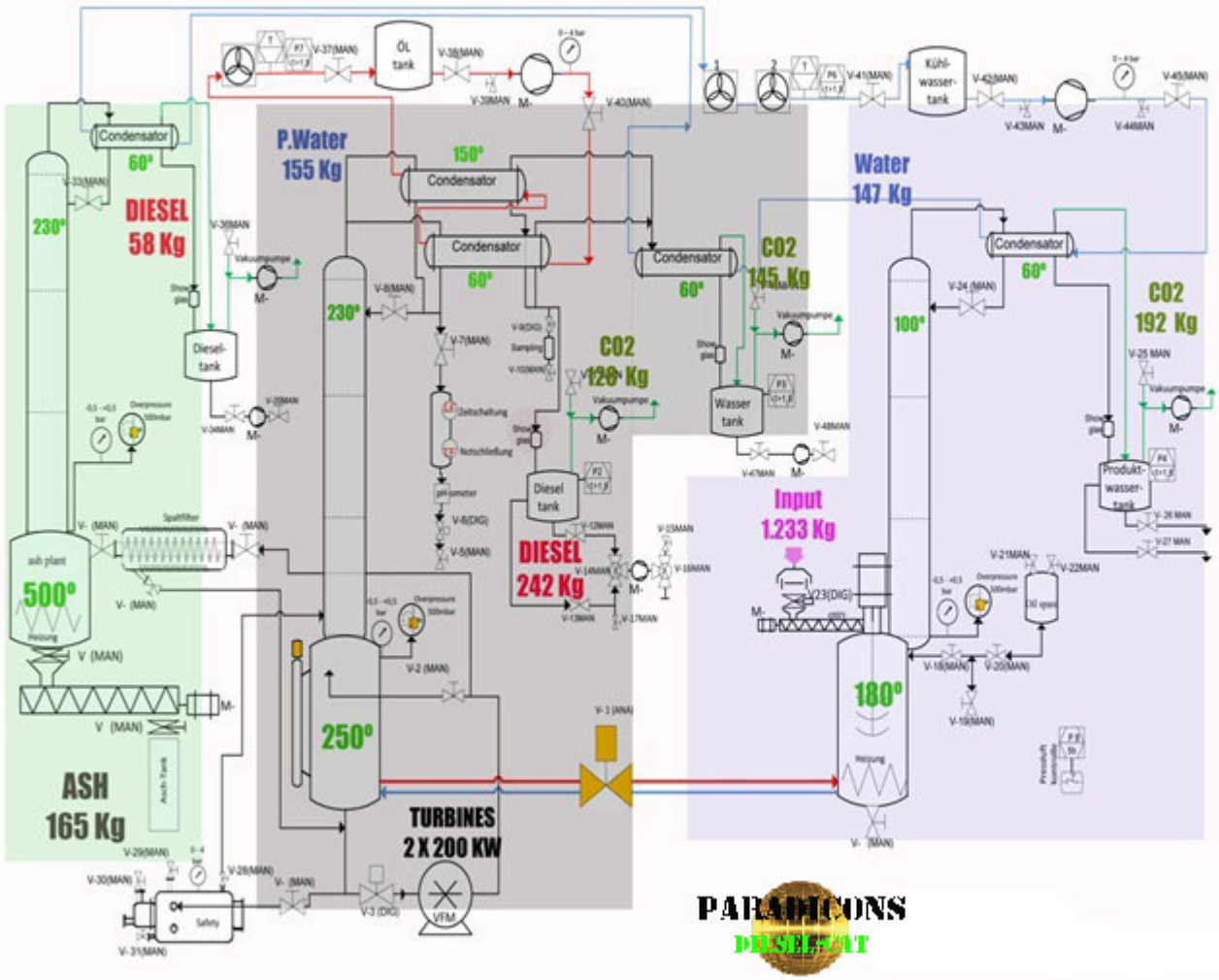

MASS BALANCE
STRAW: 1 TON
(moisture content 15%)

STRAW	1000 KG
MINERAL OIL	64 KG
CATALYST	10 KG
LIME	12 KG
WATER	147 KG
INPUTS	1233 KG

WATER	303 KG
CO2	465 KG
ASH	165 KG
DIESEL	300 KG
OUTPUTS	1233 KG

PARADICONS
DIESEL-KAT

Competition in fuel production systems

•Germany supported Choren and Biolique in the production of bio-fuels. They employ a combination of Pyrolysis, high temperature gasification (Choren) or high temperature pressurized gasification (Biolique 60 bar), many cleaning and reaction steps (CO-conversion, CO2-extraction and neutralization), the compressing of the syngas to 60 bar and finally the Fischer-Tropsch-Synthesis. The combination of such processes in line multiplies the low efficiency to finally about 2 % of CV of the input material.

•These processes have been known for a long time. The latest invention of this system, the Fischer-Tropsch-Synthesis, was invented in the year 1922. This process was applied successfully only to hard coal. Attempts were made in the 1970's to apply this process to brown coal and biomass by the company Thein-Braun/KWU, but this ended without success.

•Choren finally stopped after 130 Mio. invested in „research". Biolique received for the nearly same process so far €30 Mio. Biolique uses high temperature pressurized gasification at 60 bar, in a melting chamber (1300 – 1400°C) in contrast to Choren at 1600°C pressure free but also pure oxygen gasification.

•The German Government now puts its hopes on wind power to become the energy system of the Future, as well as electrolysis. Energy production from wind has a significant disadvantage concerning the relation of wind speed to electricity production. The energy production changes with the potency of 3. When the wind drops from maximum to 10 %, electricity production drops to 1 /1000. Therefore a 6 MW turbine at 10 % of wind power produces 6 kW. Solar-systems require high subsidies. Germany spent €100 Billion in solar subsidies for a return of 2 % of electricity production in Germany from solar PV.

•PDC needs for the process 15 % of the produced fuel (diesel). The low temperature conversion, in a closed system creates virtually no by-product. Therefore the overall efficiency of the system reaches about 85 %.

The PDC Technology

PARADICONS DIESEL-KAT

Graphic: Energy Efficiency Comparison between some very well known German Technologies

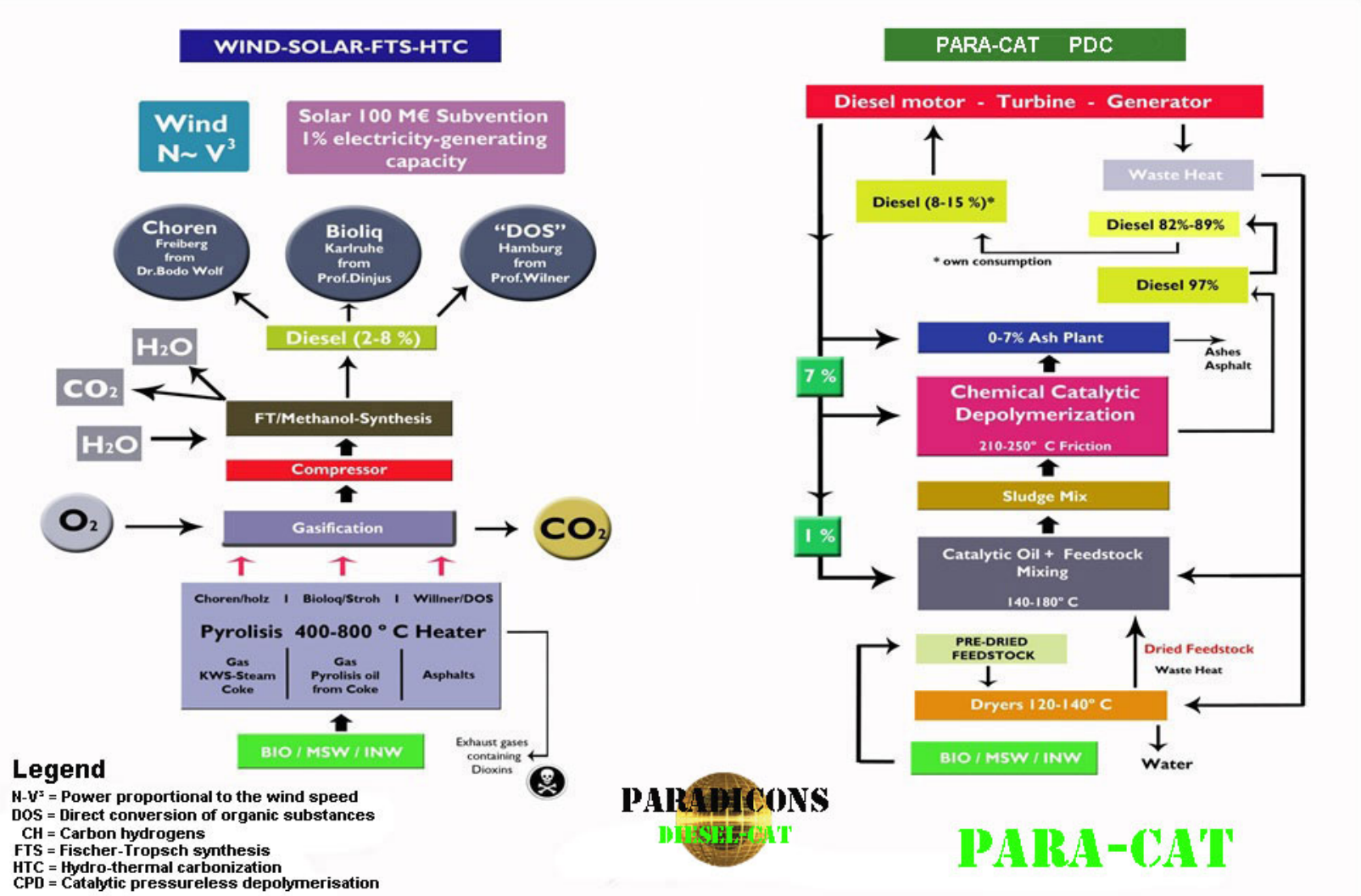

Legend

N-V³ = Power proportional to the wind speed
DOS = Direct conversion of organic substances
CH = Carbon hydrogens
FTS = Fischer-Tropsch synthesis
HTC = Hydro-thermal carbonization
CPD = Catalytic pressureless depolymerisation

PARADICONS DIESEL-KAT

Nature‘s Energy Solutions

•Plants specifically suited for the hot and dry areas of the world, such as Jatropha and Sand peaches, offer us plenty off raw material for energy in areas not generally known for biomass. The roots of the Sand peaches reach up to 30 m below ground, and can be used for the re-greening of the desert. Jatropha is a poisonous plant, but has use for the pharmaceutical Industry, as well as for fuel production using KDV technology. The yield is more than 10 tone of Diesel per ha per year.

•Sugar cane plantations are ever increasing on this planet, and already cover vast areas. These areas alone could produce enough by-product to fill the current global need for fossil fuel of 3.8 billion tones per annum, using the KDV Technology.

•Palmoil is introduced in many countries as the green oil solution. Malaysia and Indonesia alone produce each year 17 Mio. tones of Palmoil each, creating 156 Mio. tones off green residues in each country. This would be enough to produce an additional 25 Million tones per annum off carbon neutral, high quality diesel.

•Large countries such as Brazil, India, USA and Canada, can become virtually independent from fuel imports if their green residue potential for energy production is utilized. This can contribute to stopping global warming, increase the life-style of farmers and create further employment in these economies. There is currently no sector in the economy with more potential to create full time employment then green fuel. Employment opportunities in the green fuel supply for the poor and hopeless, aside from raising the standard of living, are an effective way to prevent discontent, and can so even be an effective peace program.

•The realization of decentralized energy centers for urban areas in underdeveloped nations require technically simple solutions, with low maintenance. The new PDC 150, as you can see in the slide, featuring the new turbine, the air cooling system and the pipeless compact system offers itself as an ideal solution, capable of being mass produced economically, and deployed at the source of the raw material, if desired even in mobile units.

•The input requirement for the PDC 150 is about 1000 t per annum of dry material.

The PDC Technology

PARADICONS
DIESEL-KAT

Jatropha

-1000 has.
-8,000 tons of diesel per year

Sugar cane waste

-1000 has.
-9,000 tons of diesel per year

Palm oil waste

-1000 has.
-7,000 tons of diesel per year

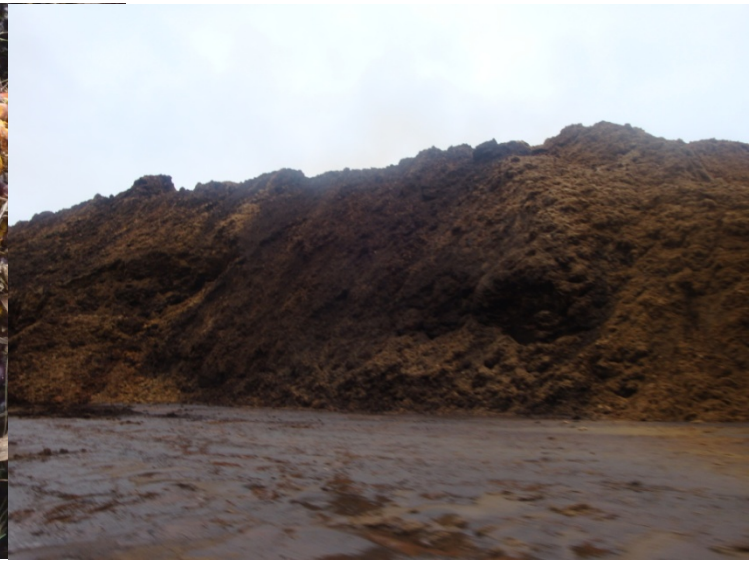

The PDC Technology

PARADICONS
DIESEL-KAT

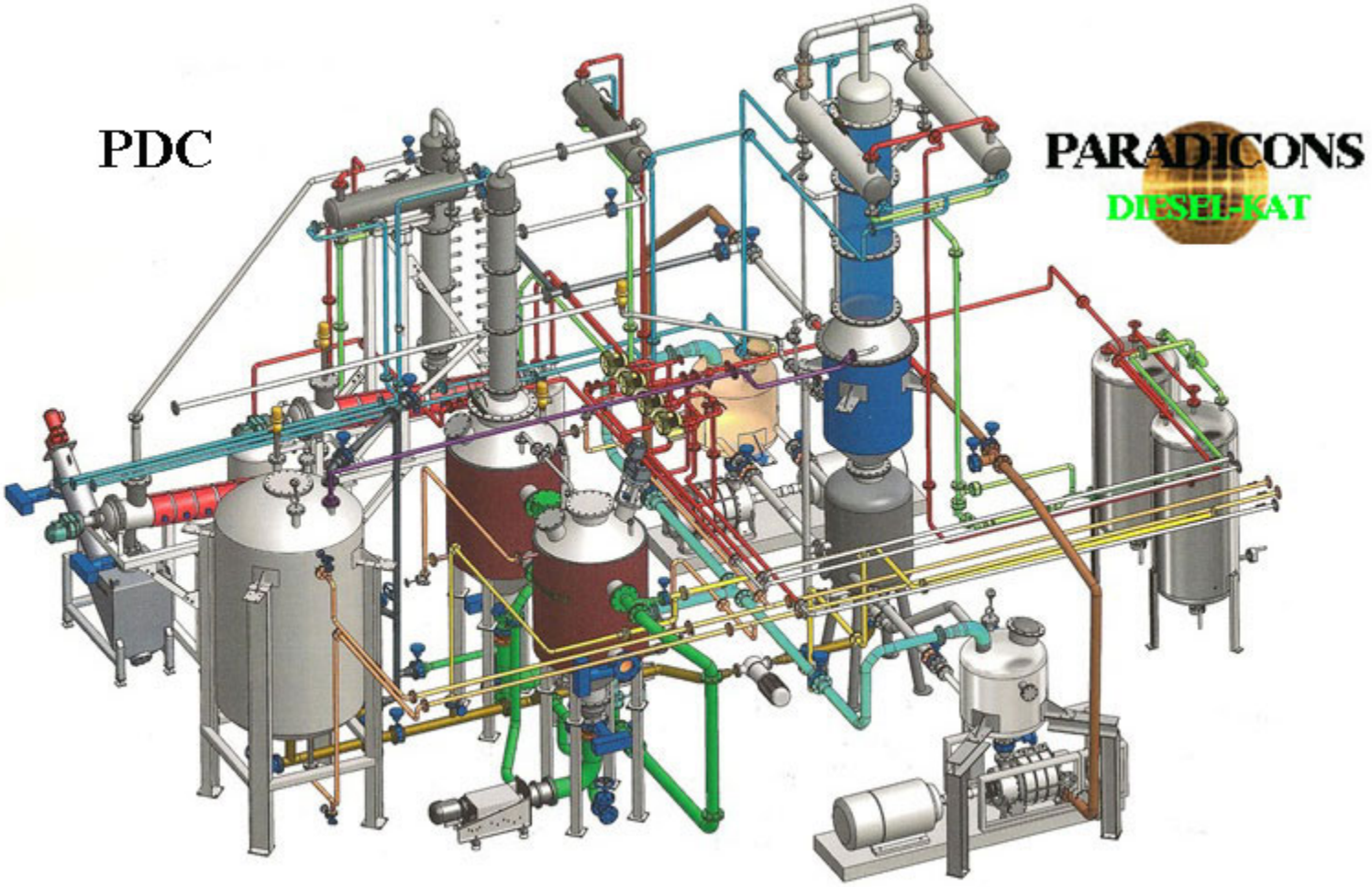

The PDC Technology

PARADICONS
DIESEL-KAT

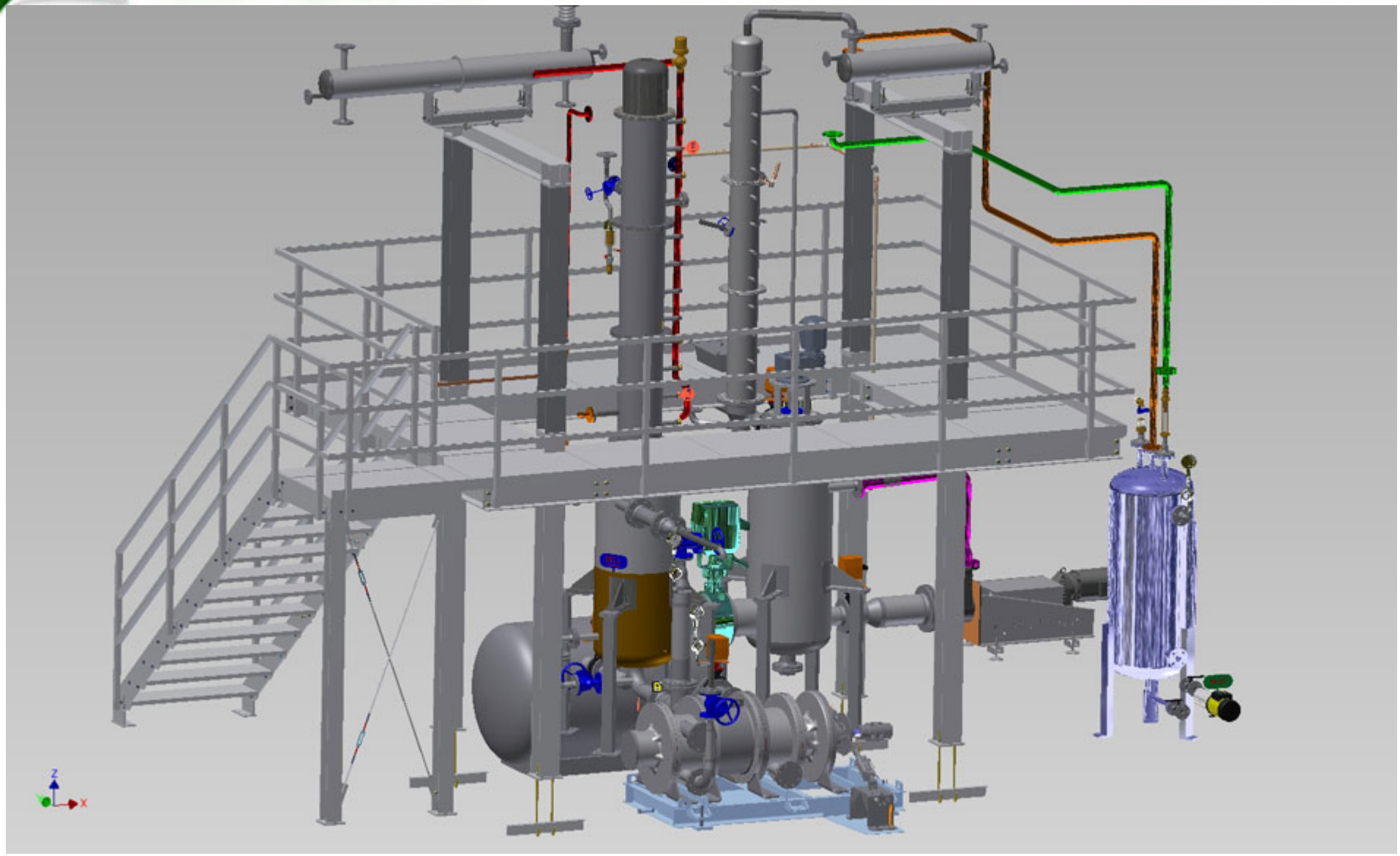

End of Presentation